Hopland - Hwy 101/Railroad Bridge

Caltrans Bridge No. 10-81 (01-MEN-101-R9.53)
CSMIP Station No. 69760

SENSOR LOCATIONS

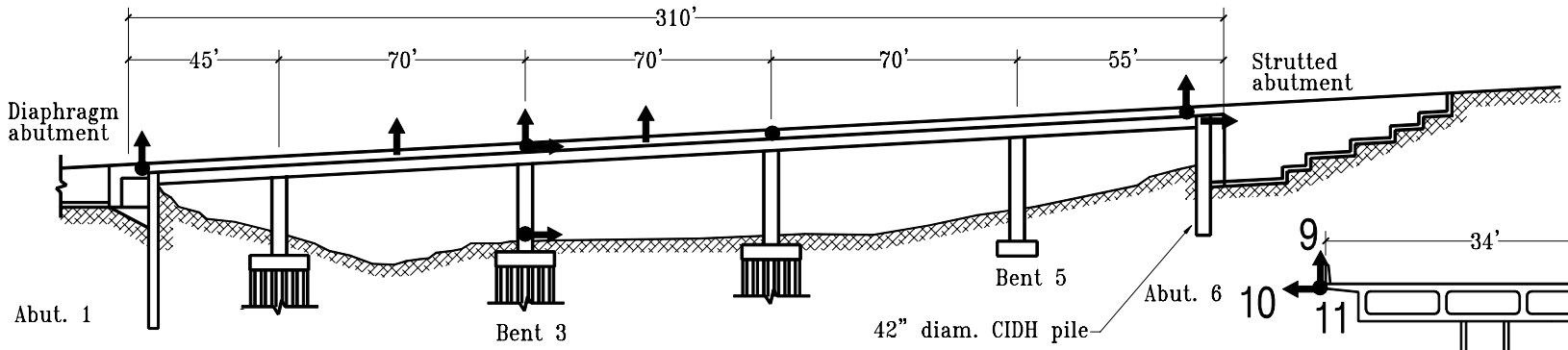

Elevation

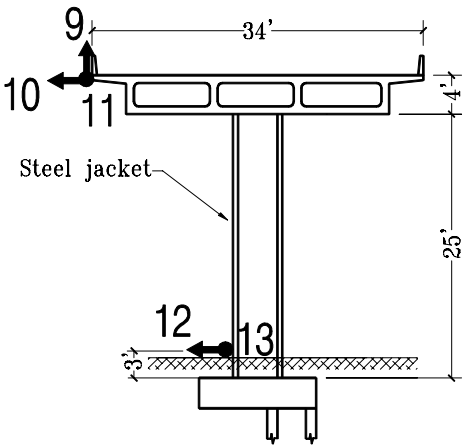

Section A-A' at Bent 3

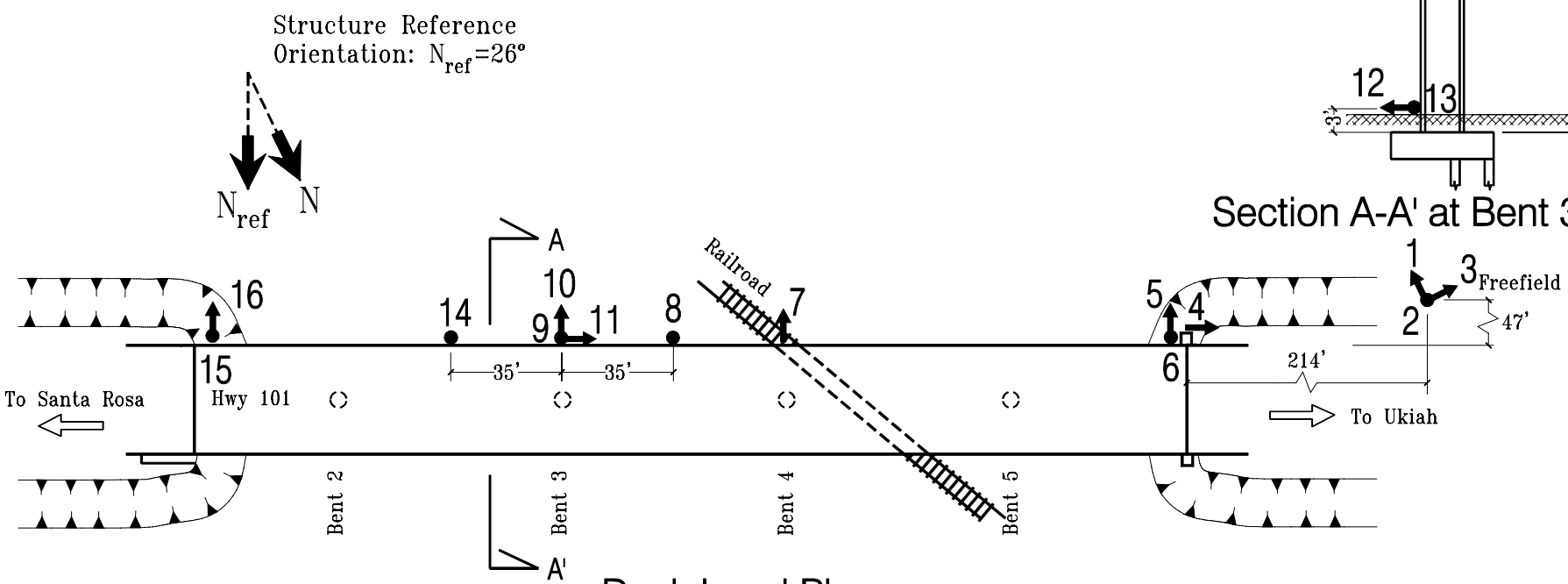

Deck Level Plan

5/22/97
Rev. 7/27/98