Richmond - Petroleum Wharf

CSMIP Station No. 58974

SENSOR LOCATIONS

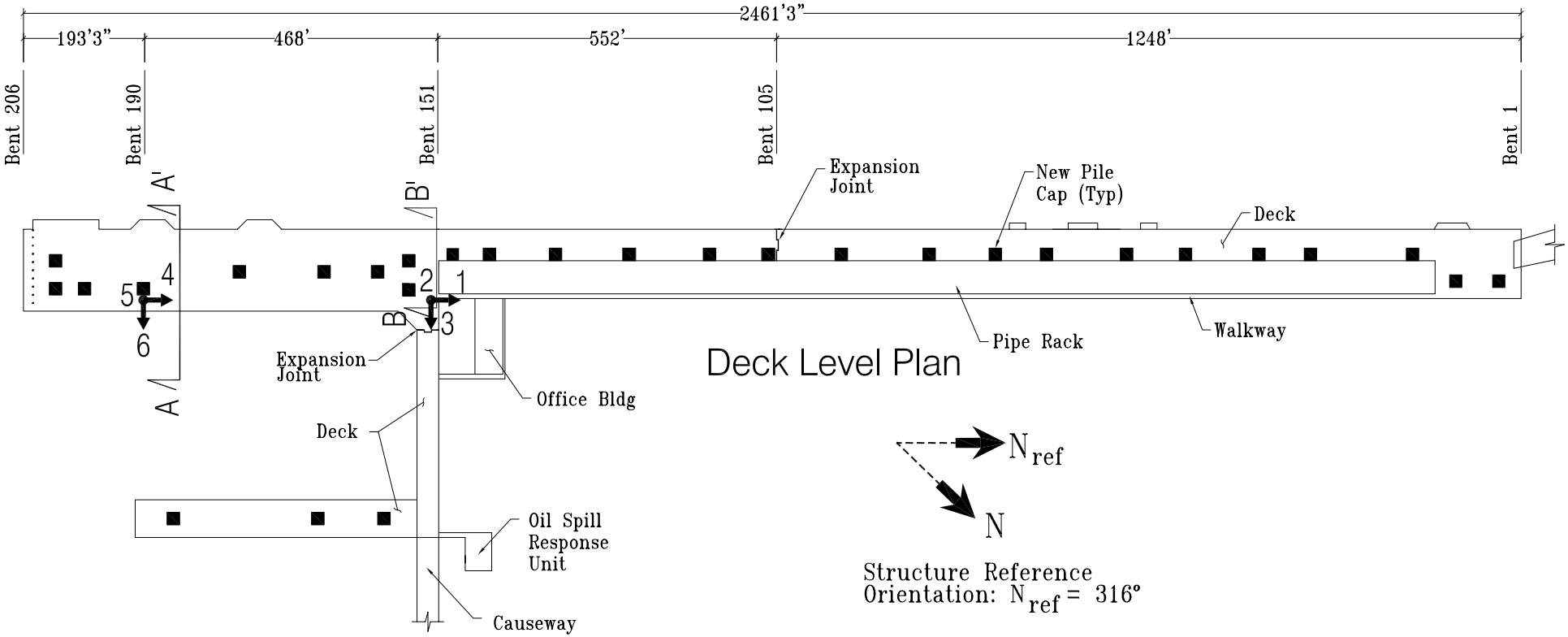

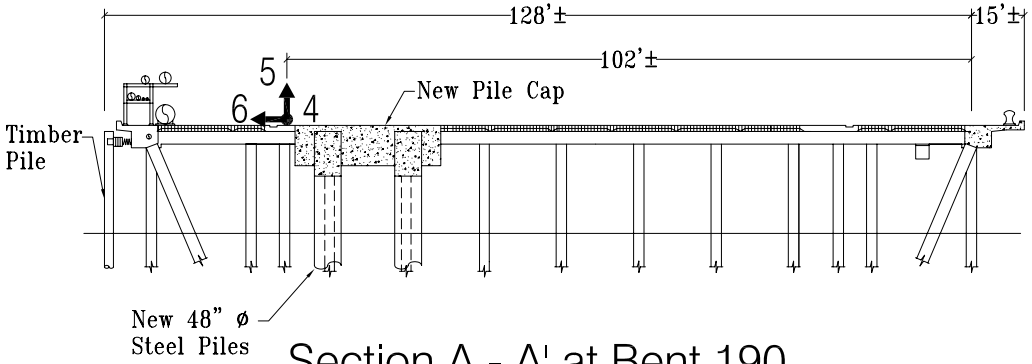

Section A - A' at Bent 190

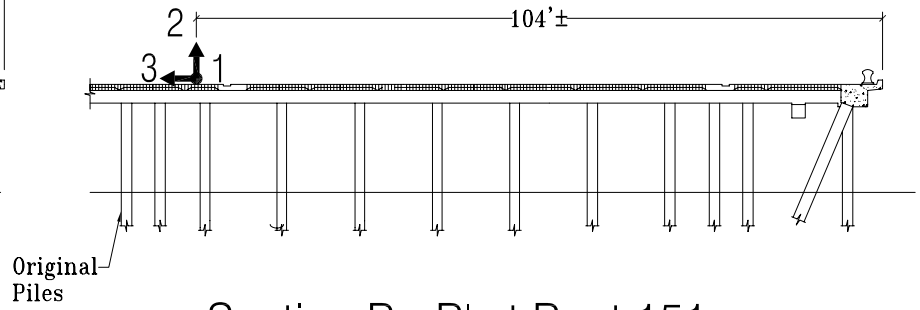

Section B - B' at Bent 151

5/7/03