Hayward - BART Elevated Section

CSMIP Station No. 58501

SENSOR LOCATIONS

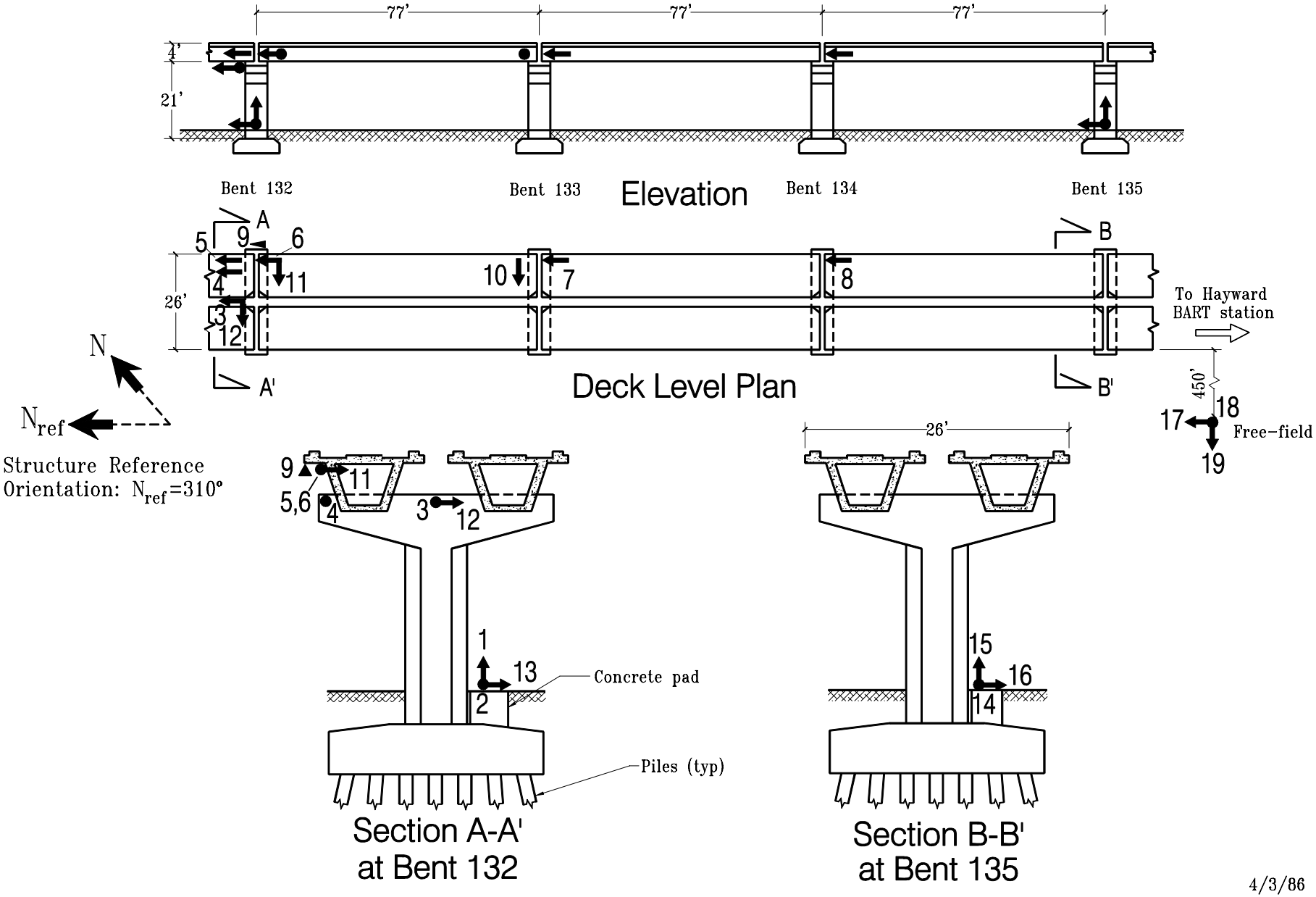

4/3/86
Rev. 5/8/98