Lake Crowley - Hwy 395 Bridge

Caltrans Bridge No. 47-48 (09-MNO-395-13.9)

CSMIP Station No. 54730

SENSOR LOCATIONS

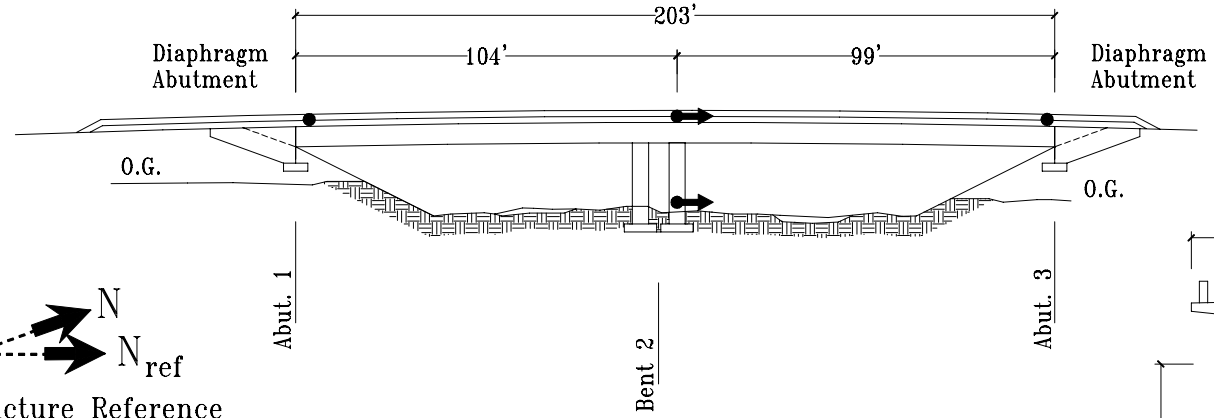

Structure Reference Orientation: N_{ref} = 20°

Elevation

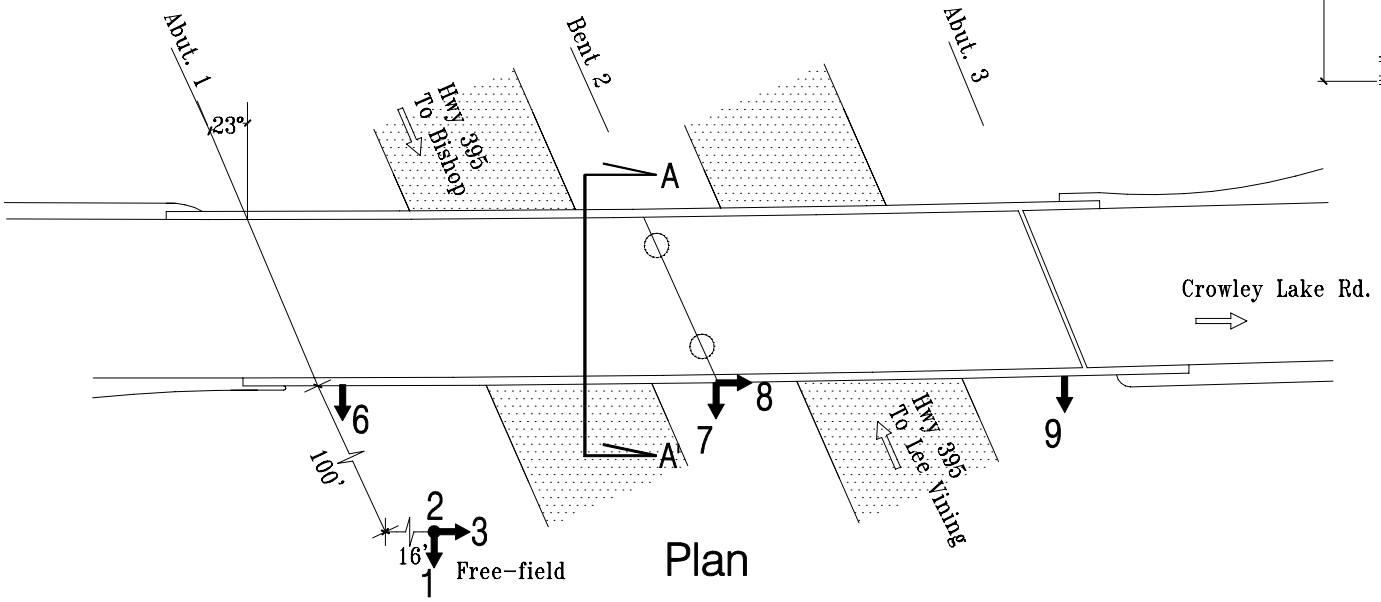

Plan

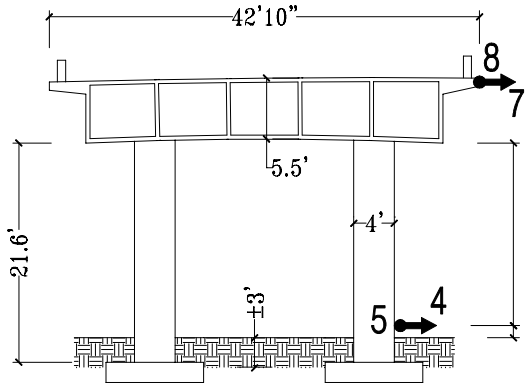

Section A-A' at Bent 2

06/28/95
Rev. 01/14/98