Ridgecrest - Hwy 395/Brown Road Bridge

Caltrans Bridge No. 50-340 (09-KER-395-R25.08)

CSMIP Station No. 33742

SENSOR LOCATIONS

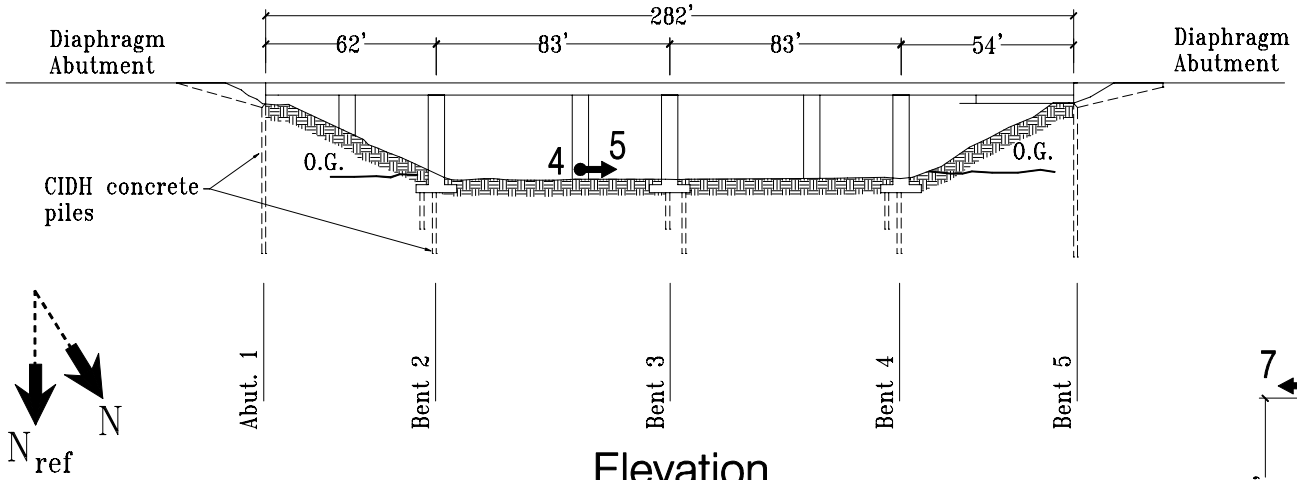

Elevation

Structure Reference Orientation: $N_{ref} = 32°$

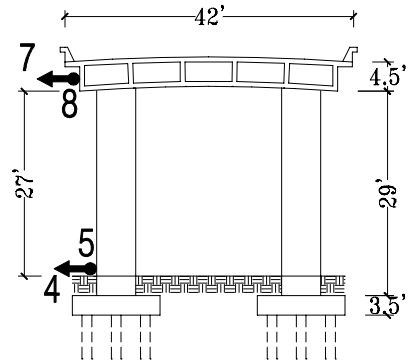

Section A-A' at Pier 3

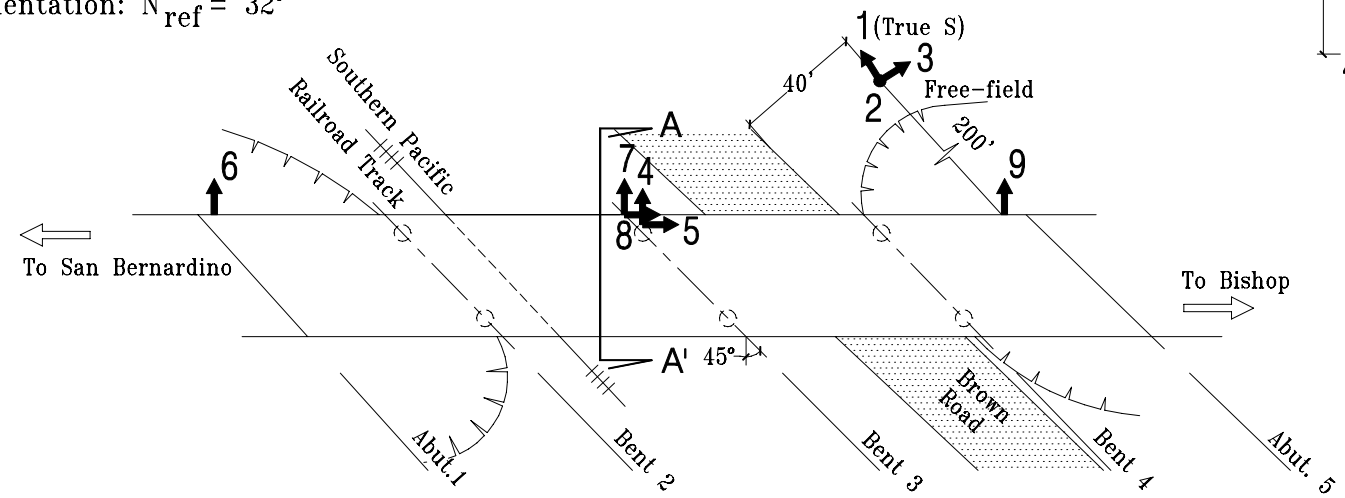

Plan

01/22/96