Cuyama - Hwy 166/Cuyama River Bridge

Caltrans Bridge No. 51-66 (05-SB-166-R69.94)

CSMIP Station No. 25758

SENSOR LOCATIONS

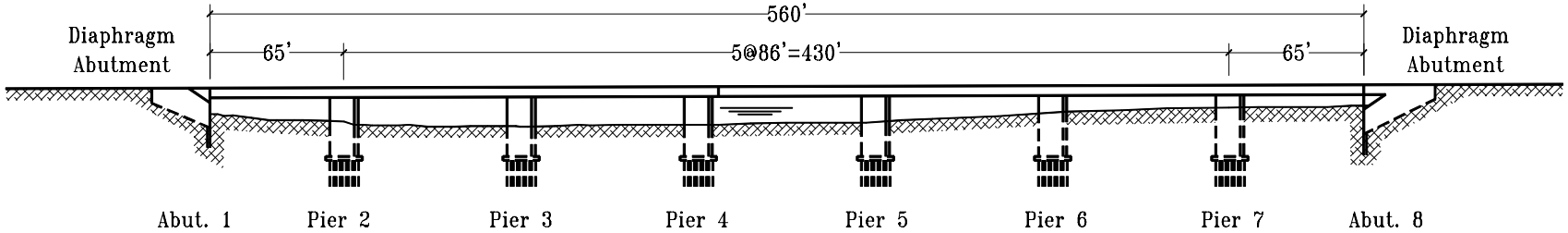

Elevation

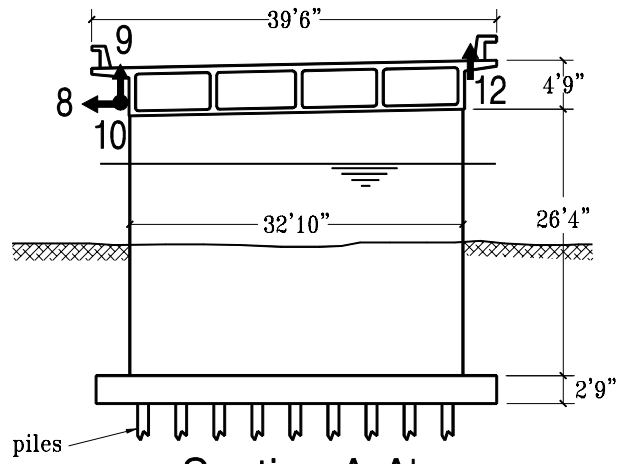

Section A-A' at Pier 4

N

*Note: Sensor 11 is located 2' east of the hinge

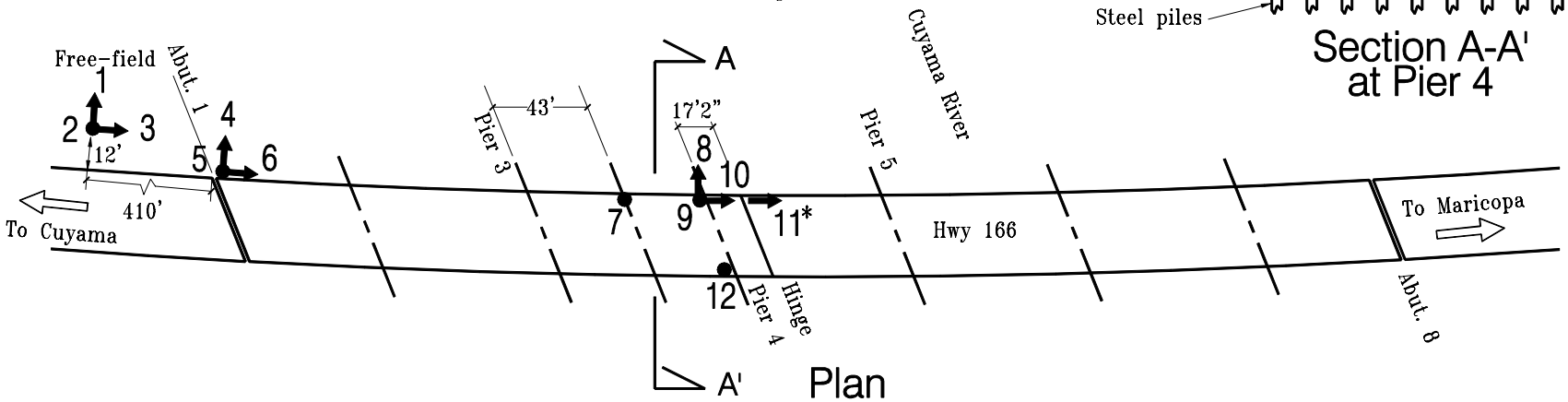

Plan

04/08/97
Rev. 05/08/98