San Fernando - I210/Hwy 118 Bridge

Caltrans Bridge No. 53-2102G (07-LA-118/210-6.0)

CSMIP Station No. 24714

SENSOR LOCATIONS

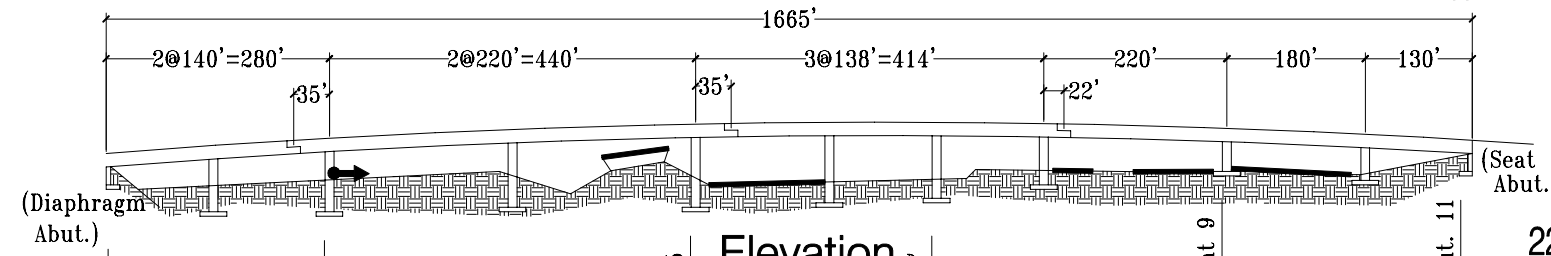

Elevation

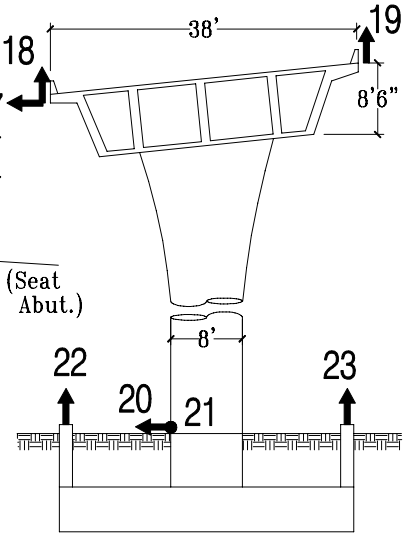

W/E Section at Bent 7

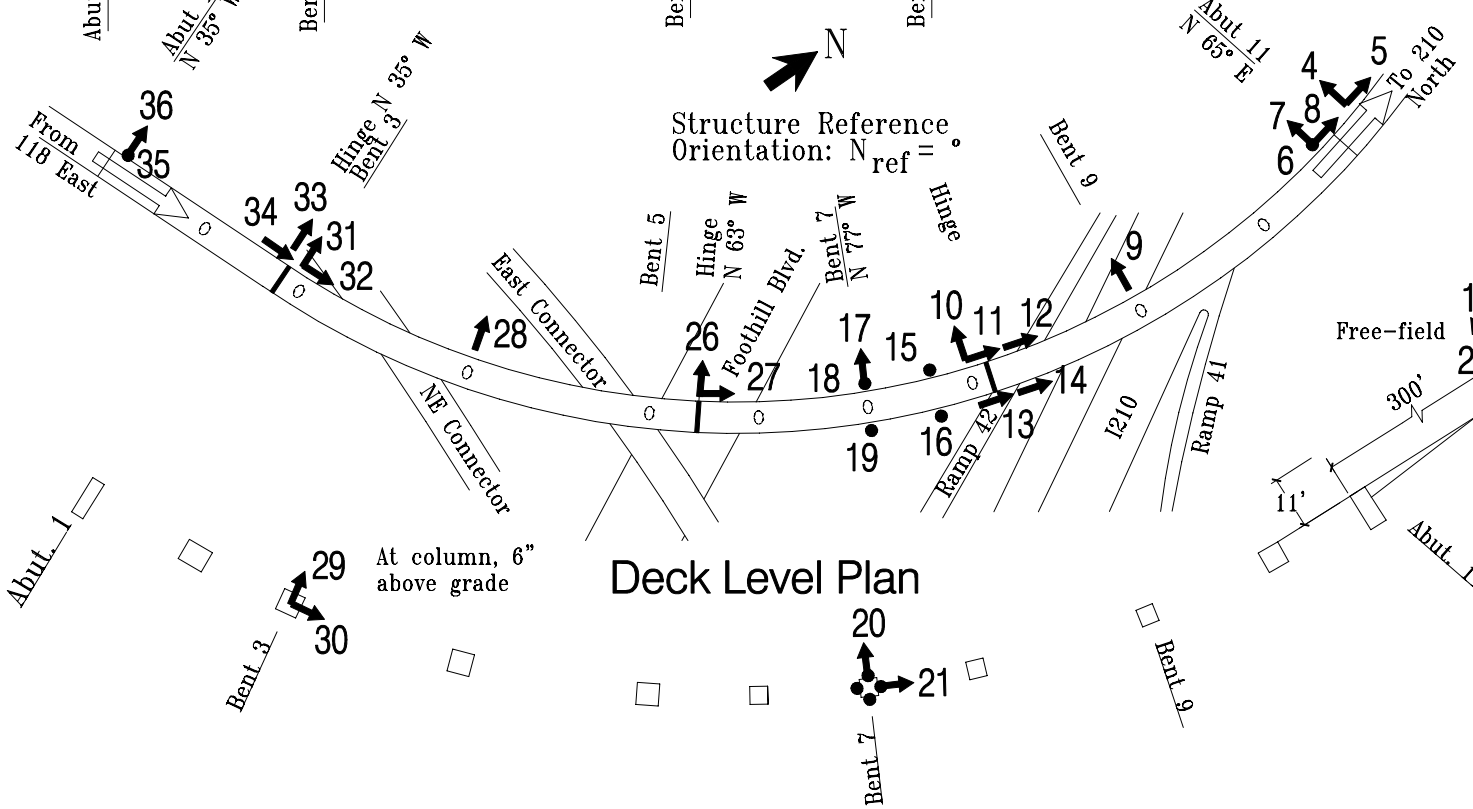

Deck Level Plan

Foundation Level Plan

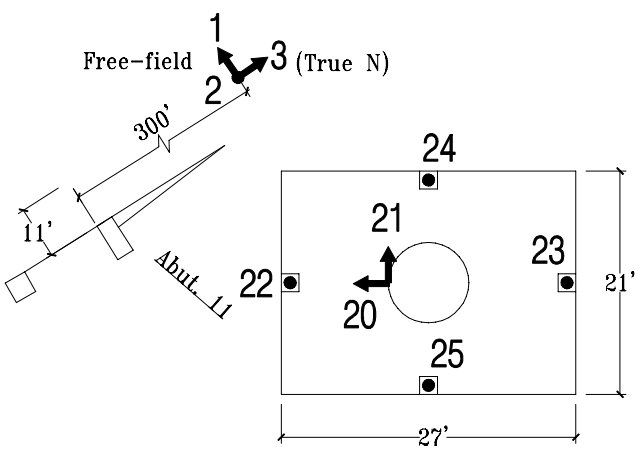

Foundation Level Plan at Bent 7

04/17/96