Los Angeles - I10/La Cienega Bridge

Caltrans Bridge No. 53-2791 (07-LA-10-8.8)

CSMIP Station No. 24704

SENSOR LOCATIONS

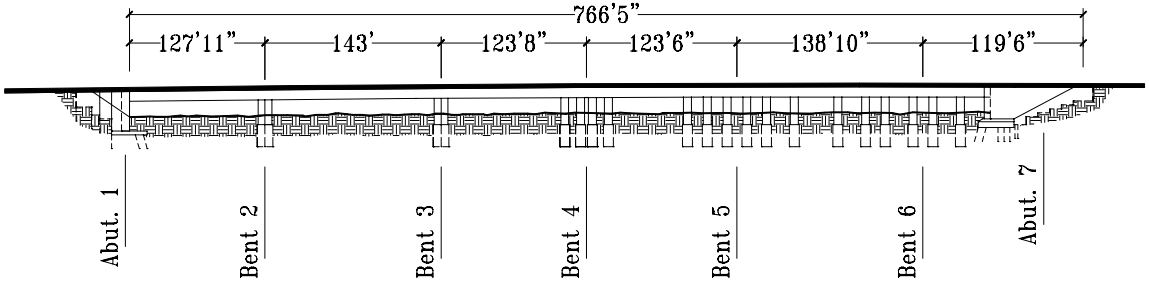

Elevation

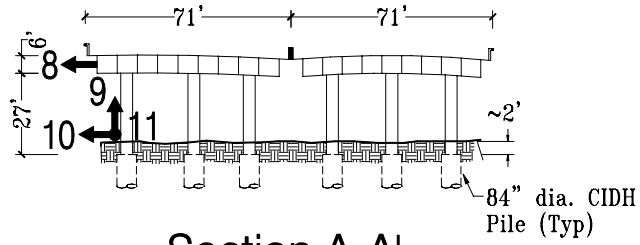

Section A-A' at Bent 3

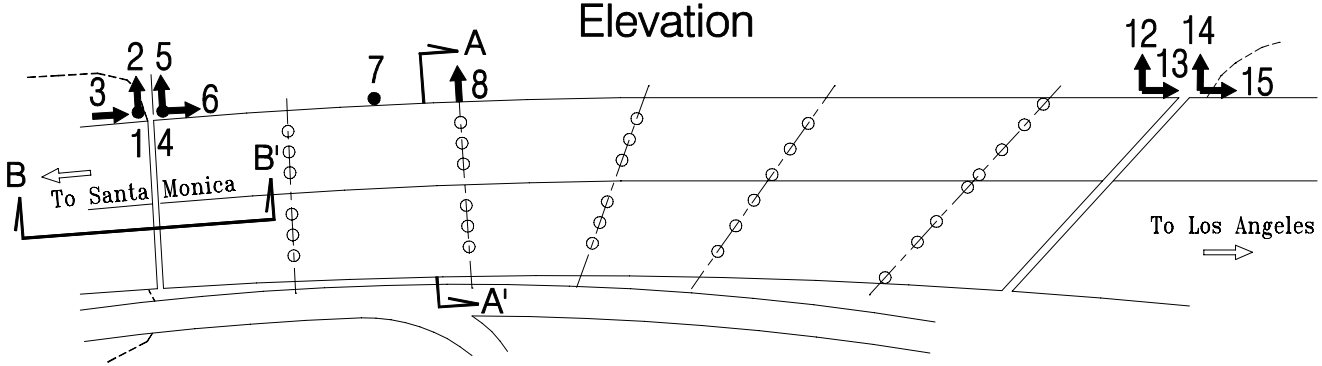

Deck Level Plan

Structure Reference Orientation: N_{ref} = °

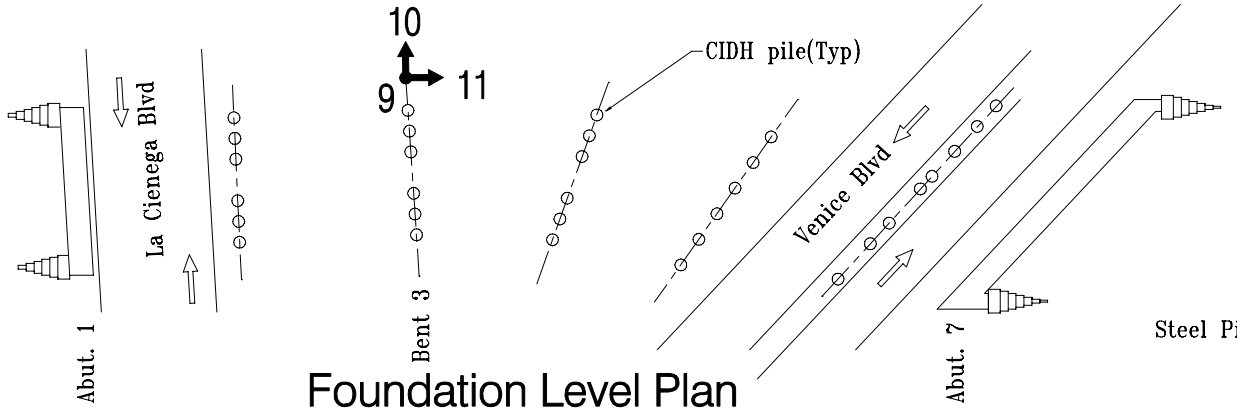

Foundation Level Plan

(Geotechnical downhole array ~200' southwest)

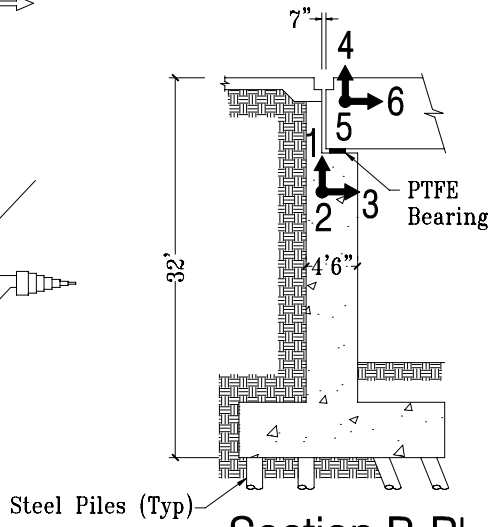

Section B-B' at Abut. 1

(Abut. 7 similar)

09/08/94