North Palm Springs - I10/62 Interchange Bridge

Caltrans Bridge No. 54-474F (08-RIV-62-0.00)

CSMIP Station No. 12666

SENSOR LOCATIONS

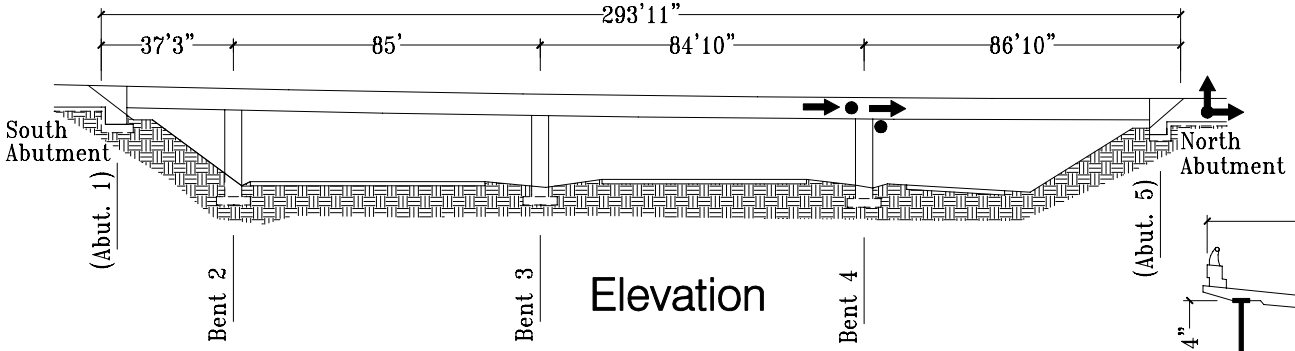

Elevation

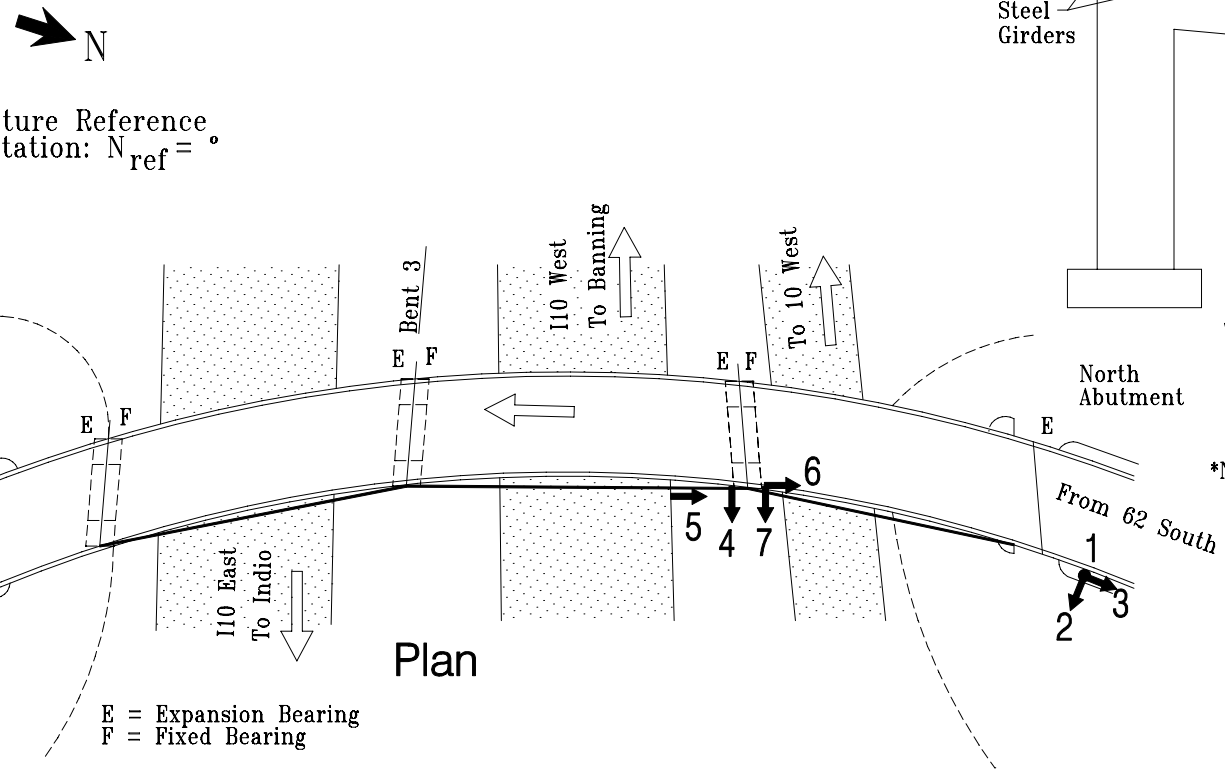

Plan

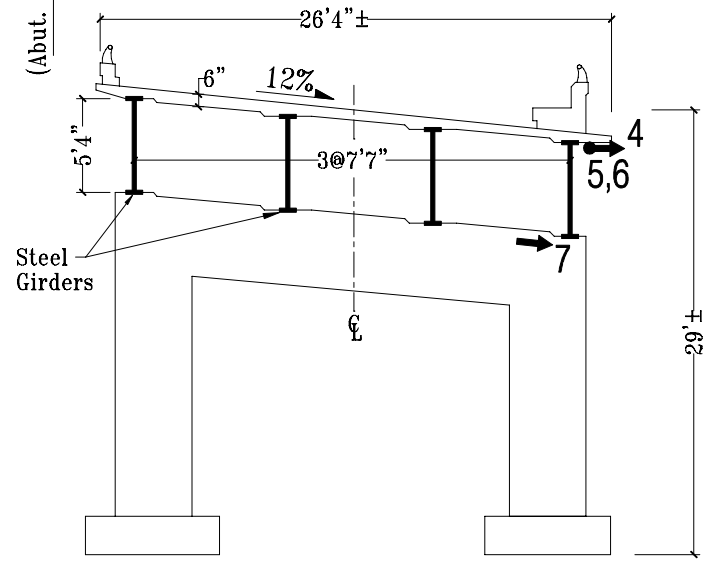

W/E Section at Bent 4

*Note: Sensors 4 & 5 mounted on span 3
Sensor 6 mounted on span 4

06/30/93