# Beaumont - I10/60 Interchange Bridge

Caltrans Bridge No. 56-452F (08-RIV-10-6.67)

CSMIP Station No. 12649

## SENSOR LOCATIONS

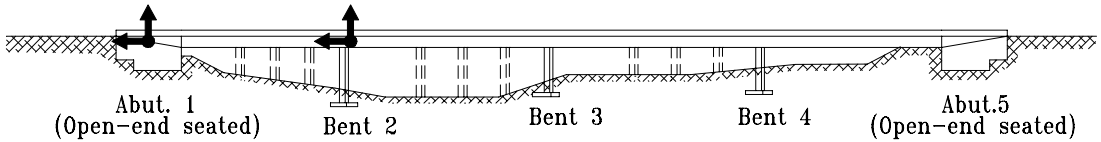


Elevation

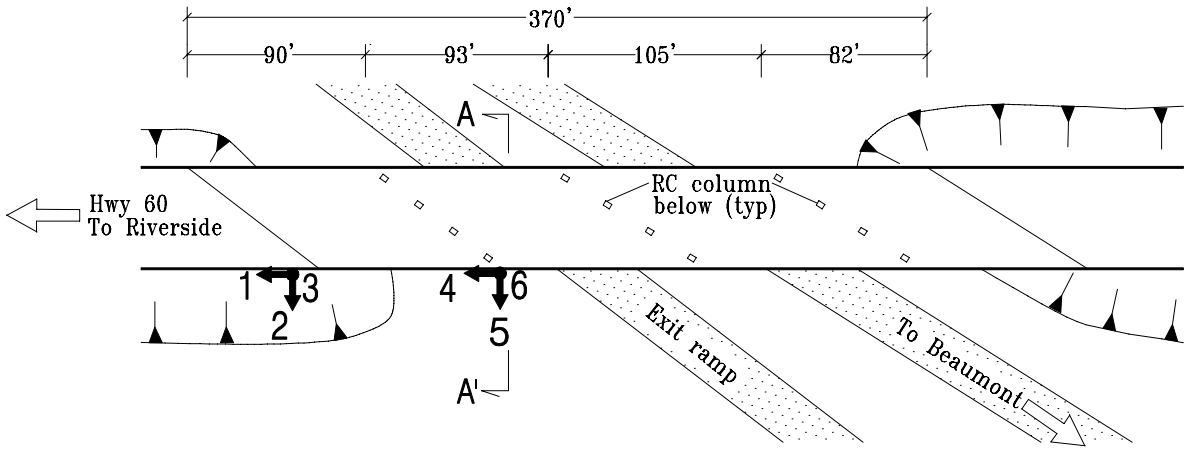


Deck Level Plan

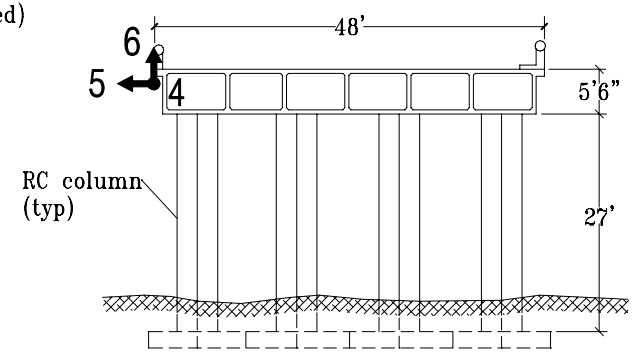


Section A-A' at Bent 2

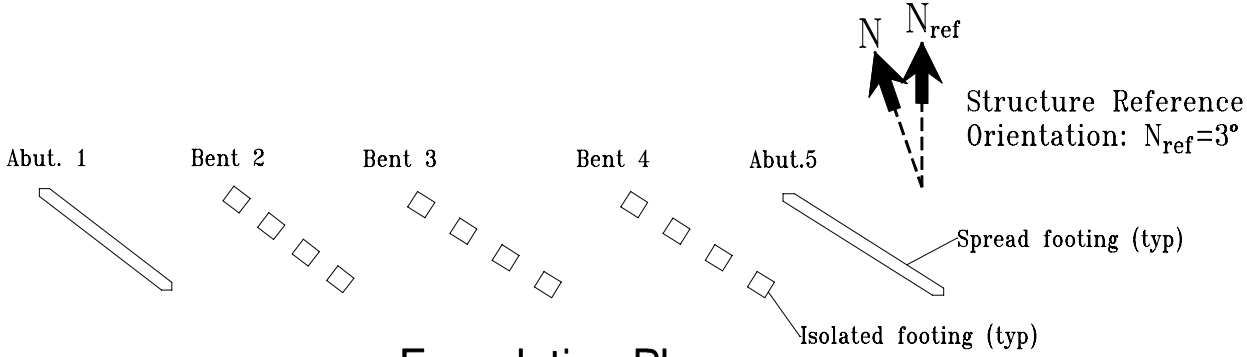


Foundation Plan

12/16/92
Rev. 05/06/98