San Diego - I5/Hwy 52 Interchange Brdige

Caltrans Bridge No. 57-520L (11-SD-5-25.91)

CSMIP Station No. 03731

SENSOR LOCATIONS

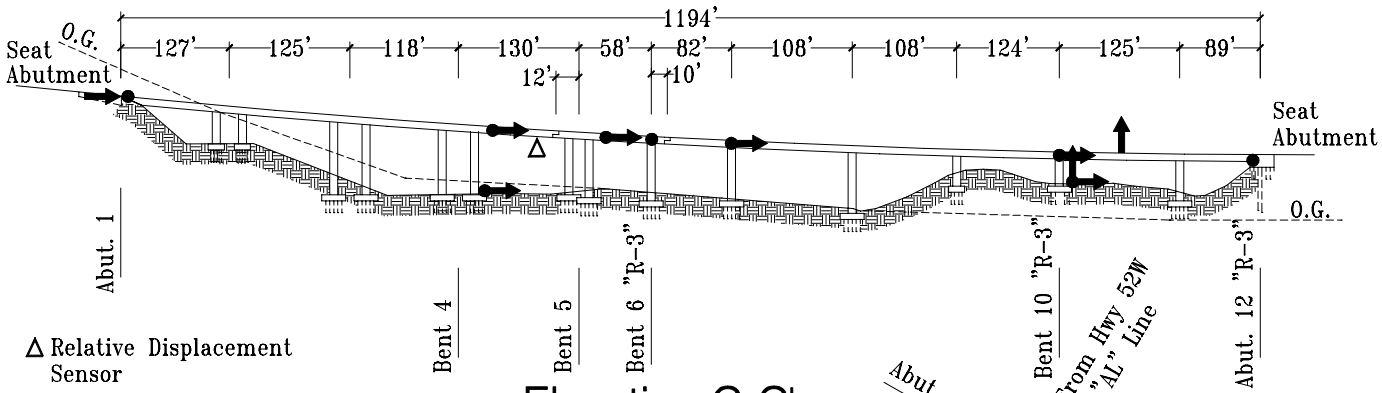

Elevation C-C'

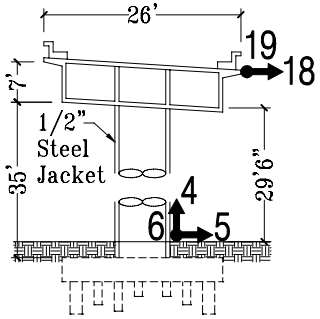

Section A-A' at Bent 10 "R-3"

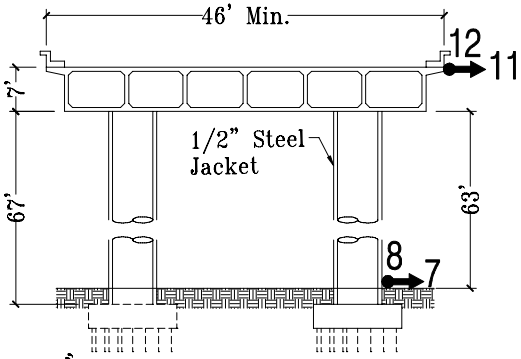

Section B-B' at Bent 4

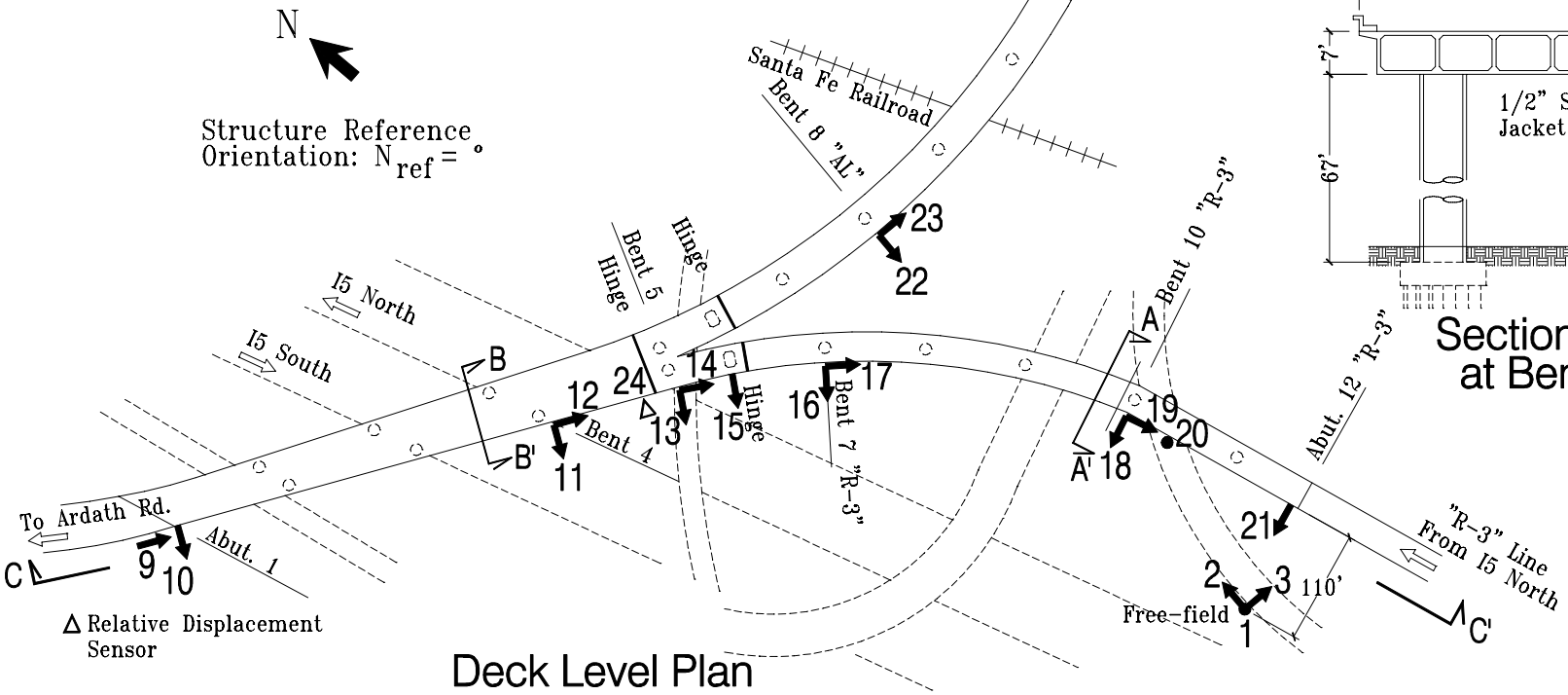

Deck Level Plan

11/20/96