Eureka - 2-story Office Bldg

(CSMIP Station No. 89687)

SENSOR LOCATIONS

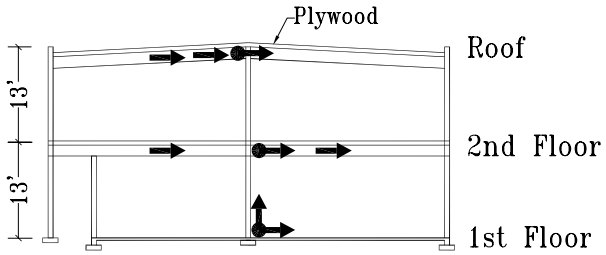

W/E Elevation

Structure Reference Orientation: N_{ref} = 350°

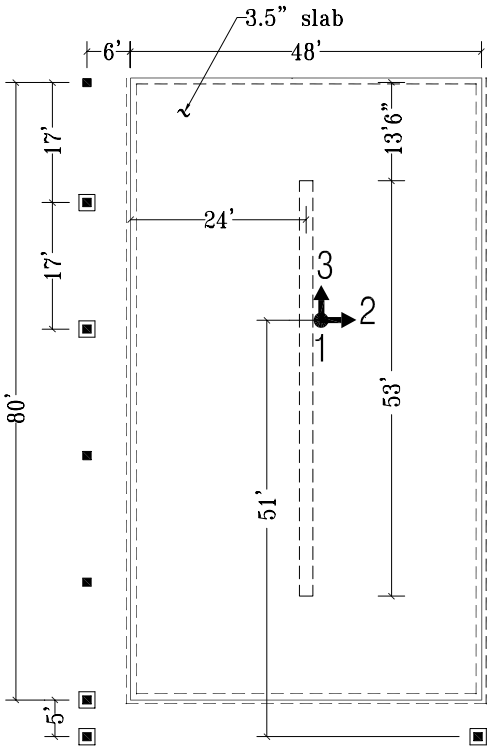

1st Floor Plan

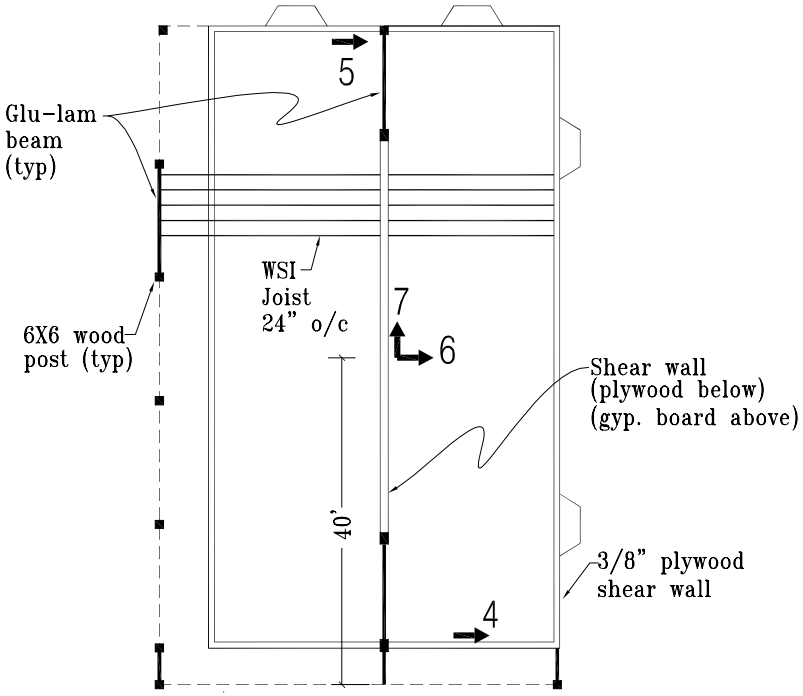

2nd Floor Plan

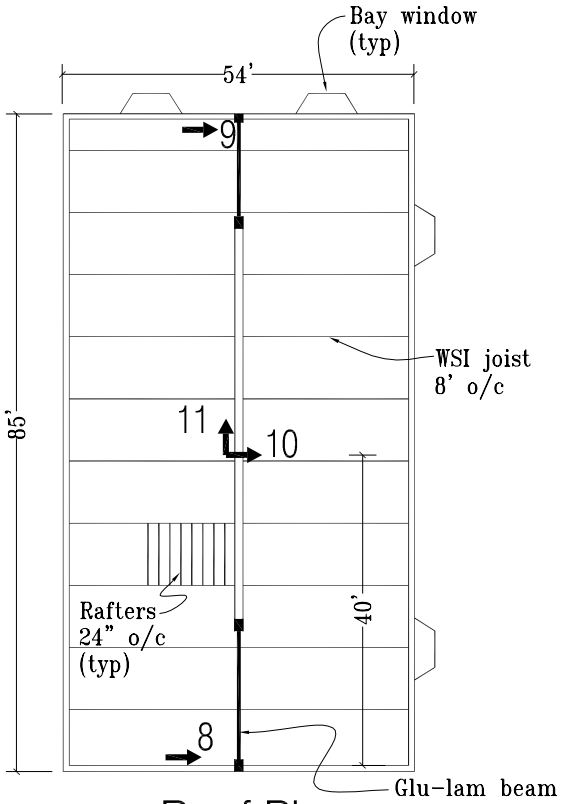

Roof Plan

08/23/94